REV.	DESCRIPTION/ECO NO.	DATE
B	CORRECTED SHAFT LENGTH DIMENSION	10/13/00
C	ADJUSTED BODY LENGTH	03/02/01

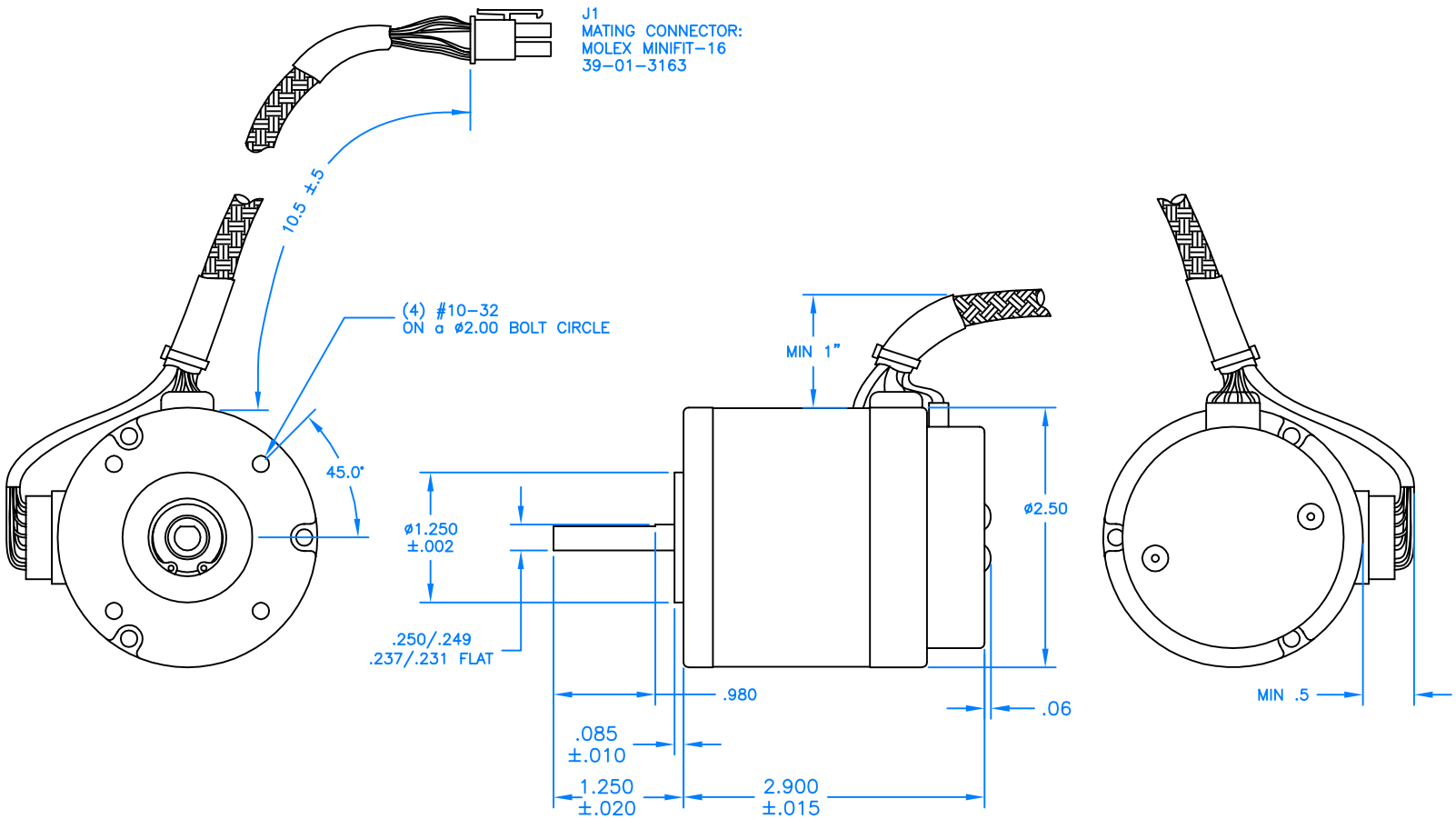

J1 Assignments	
PIN	SIGNAL
1	CHASSIS
2	+5V
3	COMM-R
4	COMM-S
5	COMM-T
6	GND
7	GND
8	NC
9	ø-R
10	ø-S
11	ø-T
12	+5V
13	ENC-I
14	ENC-B
15	ENC-A
16	GND

M-2330-XX

BRUSHLESS MOTOR, NEMA 23,
M-2330, 160 OZ-IN

Teknic, Inc.
1150-E PITTSFORD-VICTOR ROAD
PITTSFORD, NY 14534

ALL DIMENSIONS IN INCHES	MATERIAL	FINISH	TOLERANCES UNLESS OTHERWISE SPECIFIED ARE:	SCALE	DRAWN BY	DATE	FILENAME	DWG.NO.	REV.
	MATERIAL	N/A	ANGULAR ± 1° LINEAR ± .020	NONE	DRL	12/15/98	M-2330 ALL.DWG	2330	C