Teknic Hudson Motors

NEMA 34, Sealed Motors

All dimensions are in inch [mm] unless otherwise noted.
Sheet Scale 1:1

Unless otherwise specified, untoleranced dimensions default to:
X.XX: ± 0.010" [.25mm]
X.XXX: ± 0.005" [.125mm]

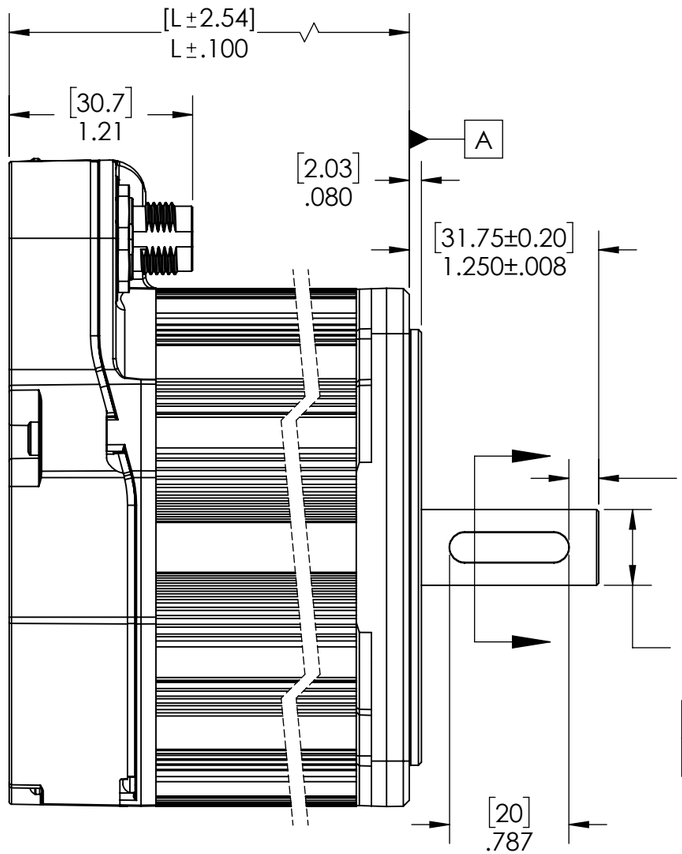

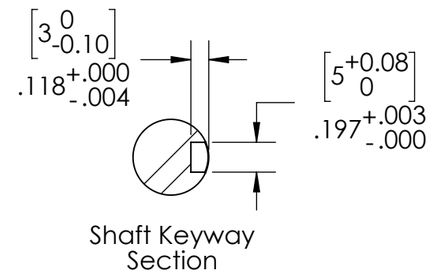

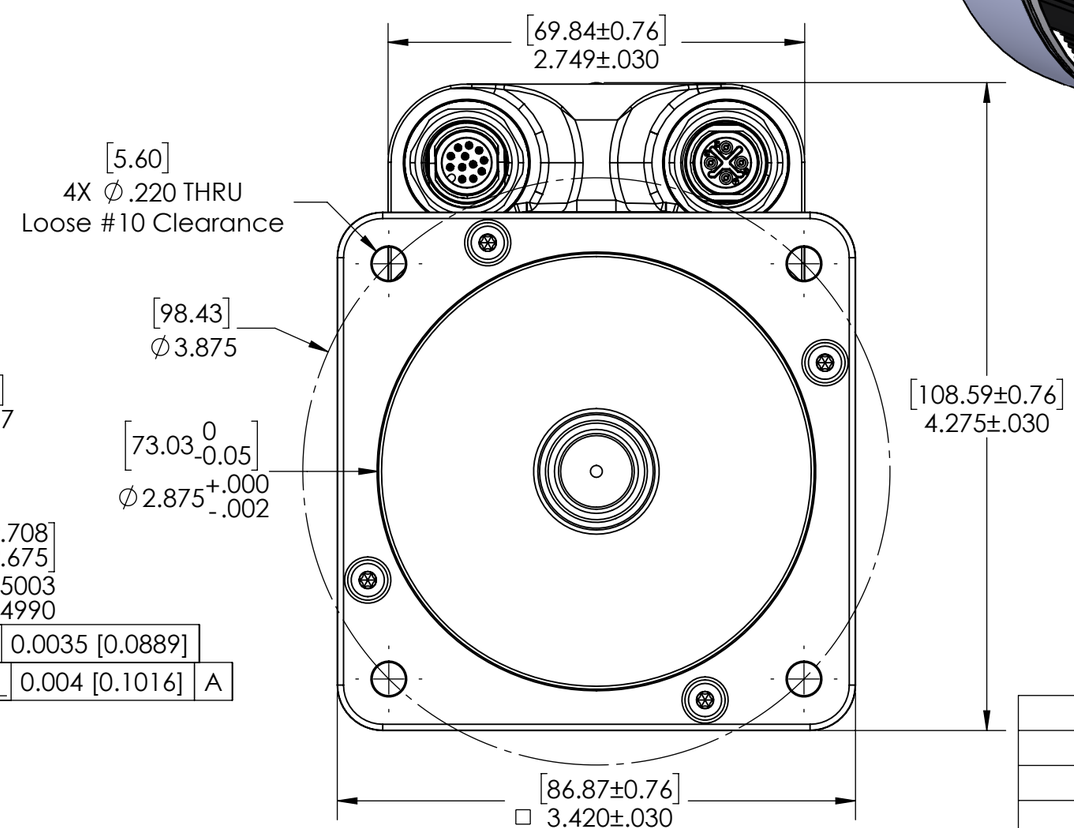

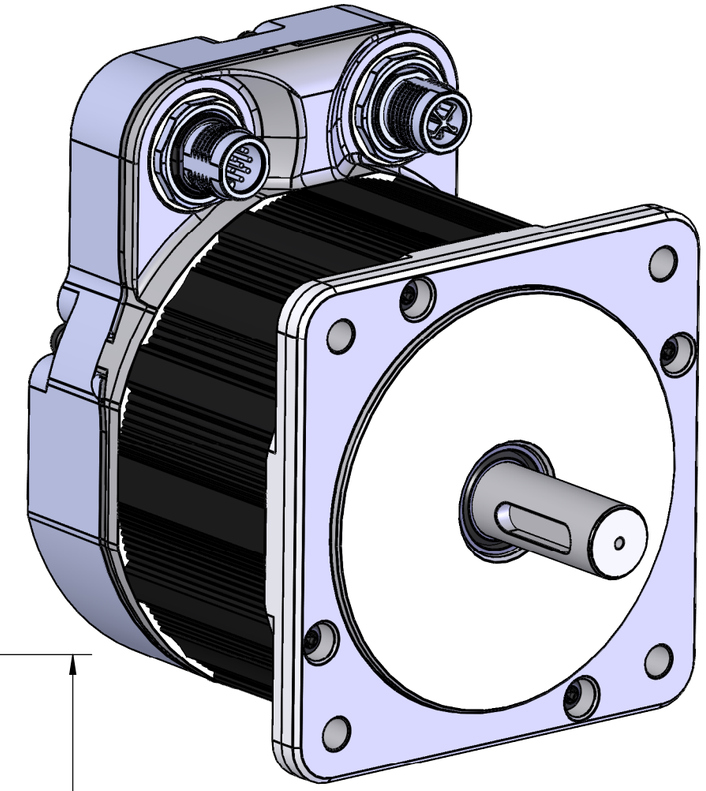

Model Number	L
M-341_ _-_ _-_ _ _	2.853 [72.46]
M-342_ _-_ _-_ _ _	3.594 [91.28]
M-343_ _-_ _-_ _ _	4.342 [110.28]
M-344_ _-_ _-_ _ _	5.097 [129.46]

DWG. NO./REV D1225/A

TITLE: 34xx Hudson Sealed Motors

Teknic, Incorporated
Victor, NY 14564 USA

This document and related electronic files are the sole property of Teknic, Incorporated and contain proprietary information.

Third-Angle Projection

Additional documentation including product specifications, up-to-date compliance information, and manuals can be downloaded from Teknic's website.
Visit https://www.teknic.com/ to access that documentation.